STEERING, GEAR BOX W/EPS AND RELATED - Z26S4D92AN/AH/BN/BH (C750130)

2026 RZR - RZR PRO S4 ULTIMATE (R01) - Z26S4D92AN/AH/BN/BH

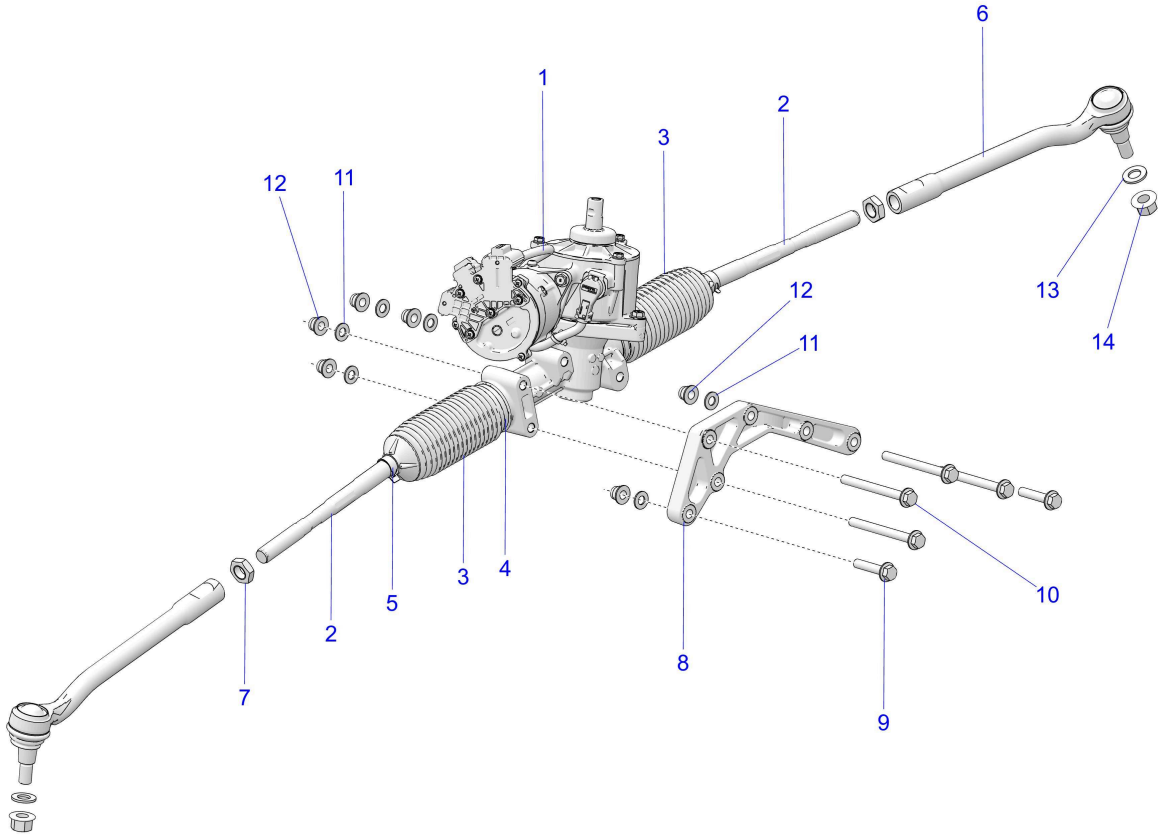

© 2023 Polaris Industries Inc.

C750130

Reference #	*Part#*	*Description*	*Quantity*
1	1830200	ASM-GEAR BOX W/EPS,STEERING [TO 7.25.2025]	1
1	1830416	ASM-GEAR BOX W/EPS,STEERING [FROM 7.25.2025]	1
2	7061282	INNER TIE ROD	2
3	5417105	BOOT KIT [INCL. INNER BOOT CLAMP]	2
4	7082536	INNER BOOT CLAMP	2
5	7662415	OUTER BOOT CLAMP	2
6	7061301	ROD-END,TAPER,PROFILED,M14X2.0	2
7	7548033	NUT- M18 JAM NUT	2
8	5634305	CASTING-STEERING RACK MNT	1
9	7518559	BOLT-M10X1.25X50,HXFLG-OLIVE D	2
10	7520807	SCR-HXFL-M10X1.25X105 10.9 ZOD	2
11	7556153	WASHER-3/8 FW SAE STL THRU-HRD	6
12	7547333	NUT-HXFL M10X1.25 8 ZTB NYL	6
13	7557195	WSHR-15X28X2.5 ZPB	2
14	7547981	NUT-HXFL-M14X2X 10 ZFB SPC	2

Copyright 1996-2026 Polaris Industries U.S.A All rights reserved.